ViscoTwin 70 G8 (NG)
TORQUE VALUES

Updated on November 12th, 2021

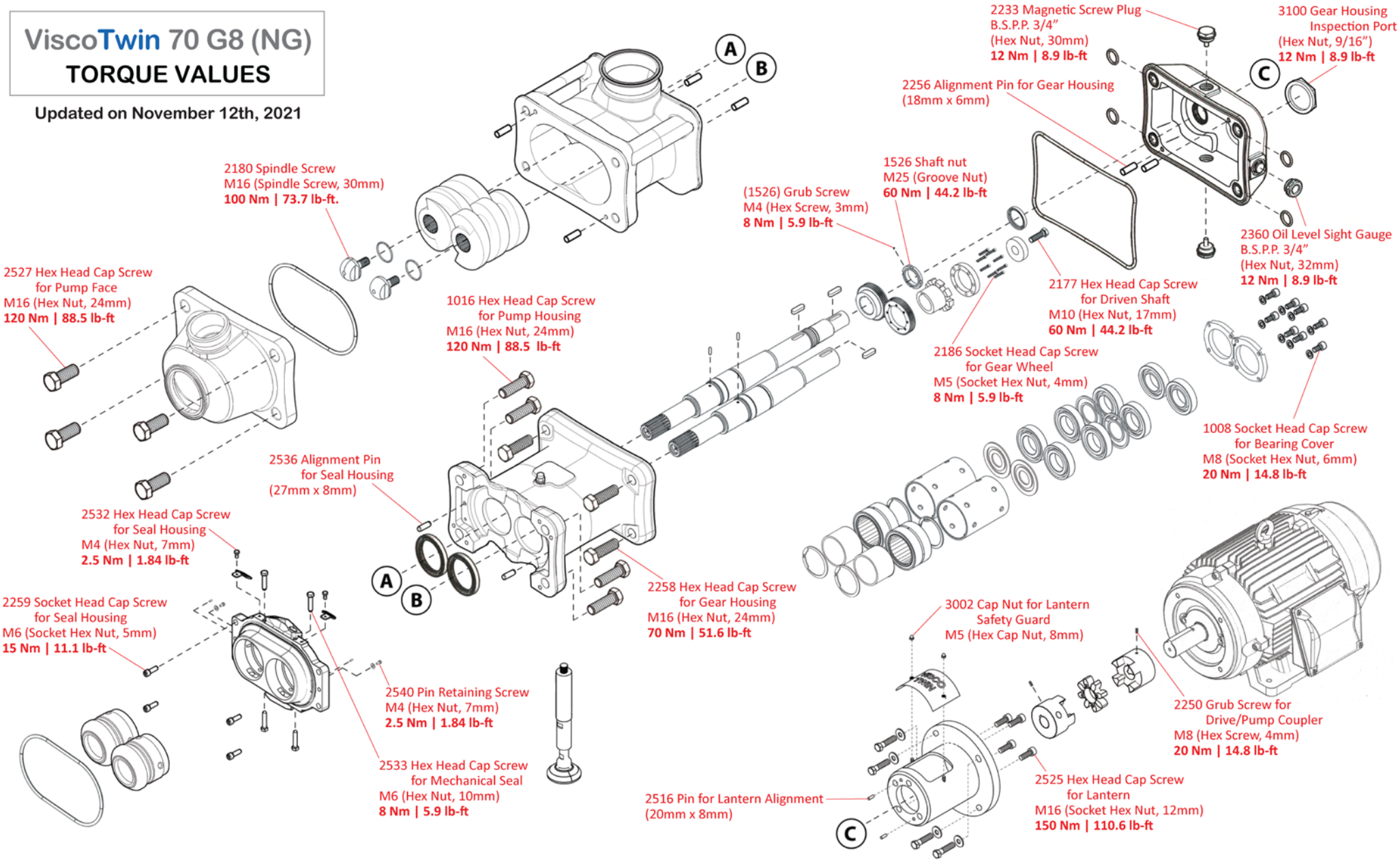

PROCESSTEC
GET TOMORROW'S TECHNOLOGY TODAY