ViscoTwin 130 G10
DAMS HUHNSEAL
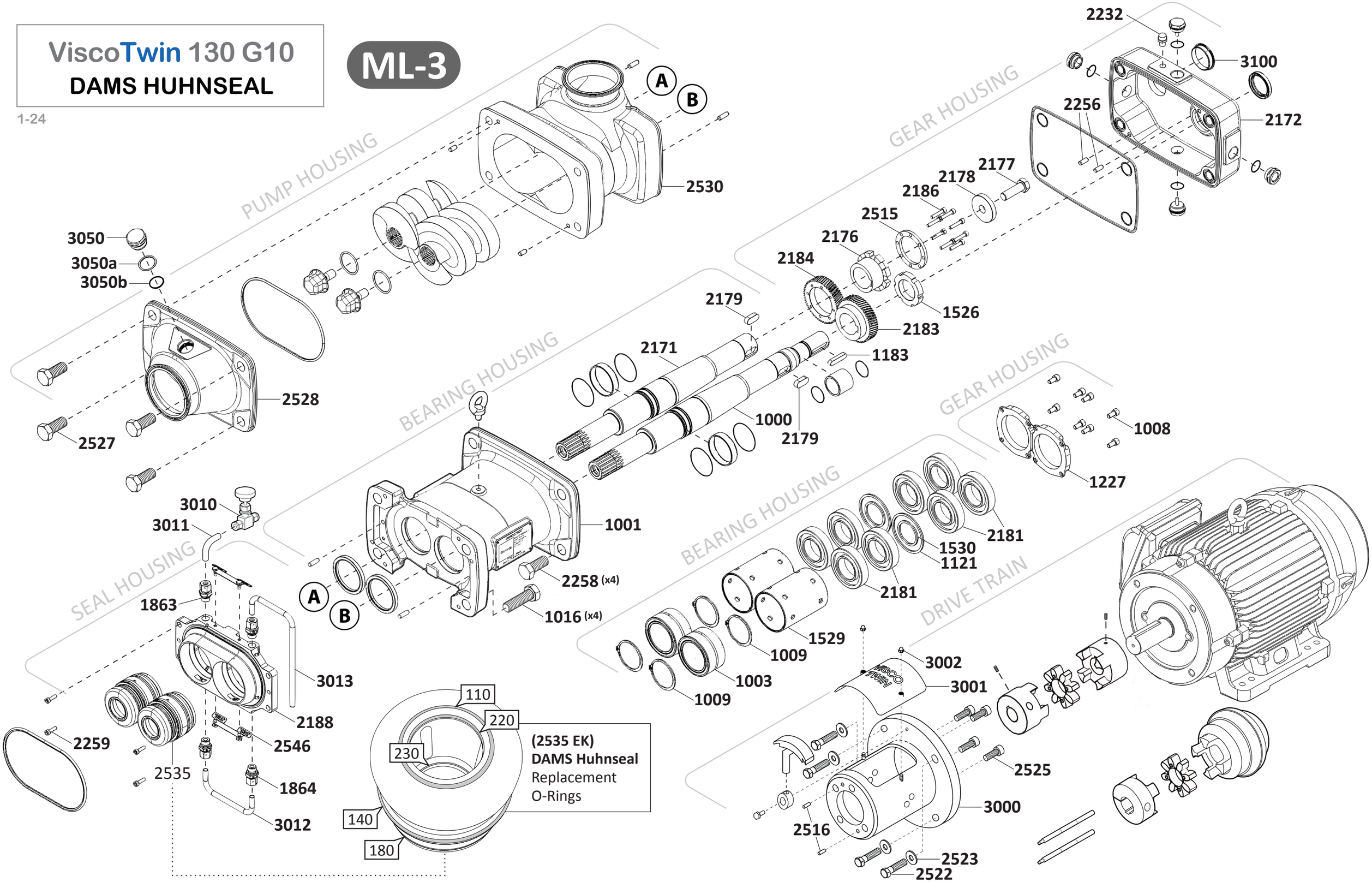
ML-3