ViscoTwin 130 B-SAMS HUHNSEAL

eData-ID:

TAG #:
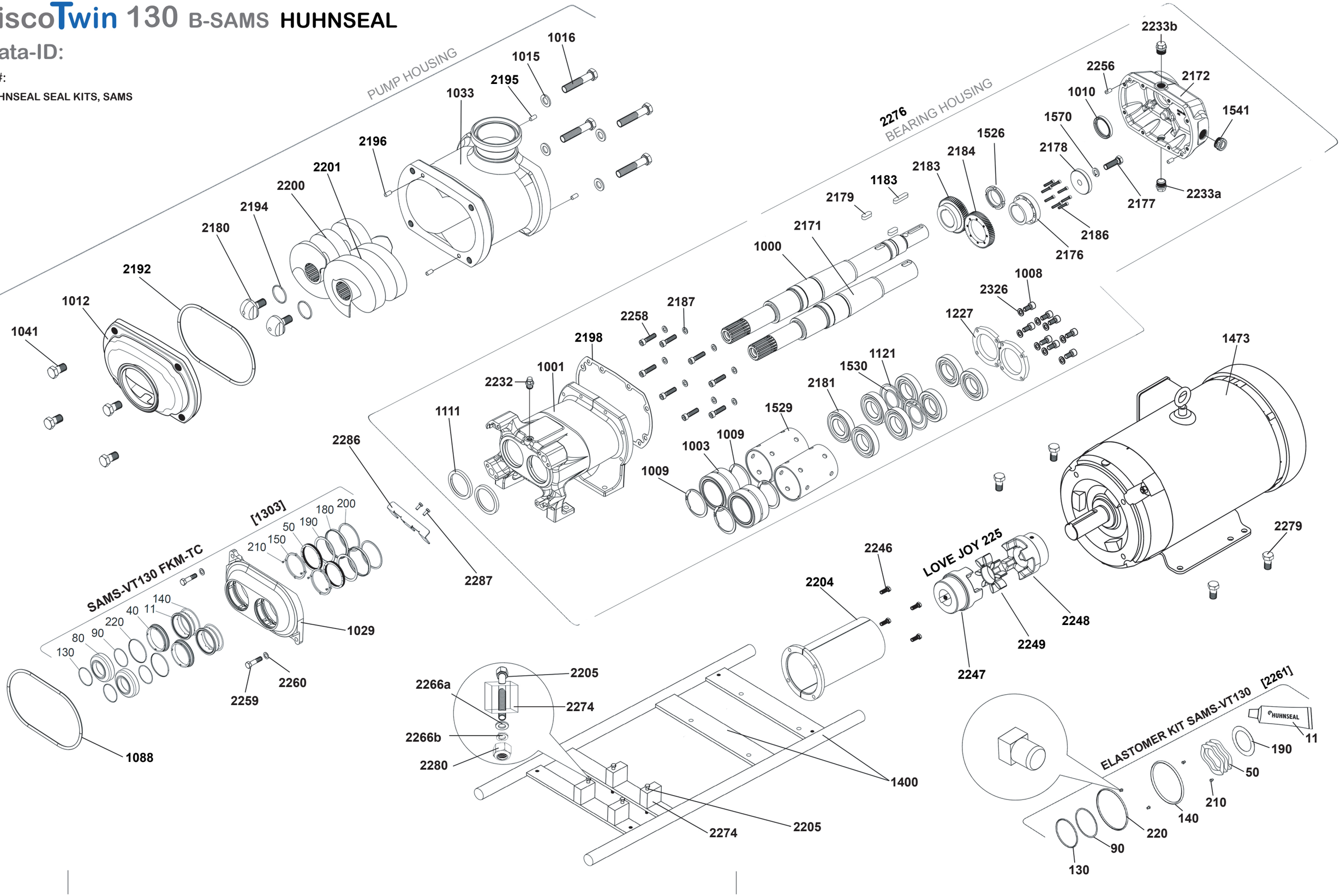
HUHNSEAL SEAL KITS, SAMS