ViscoTwin 70 G7
TORQUE VALUE CHART
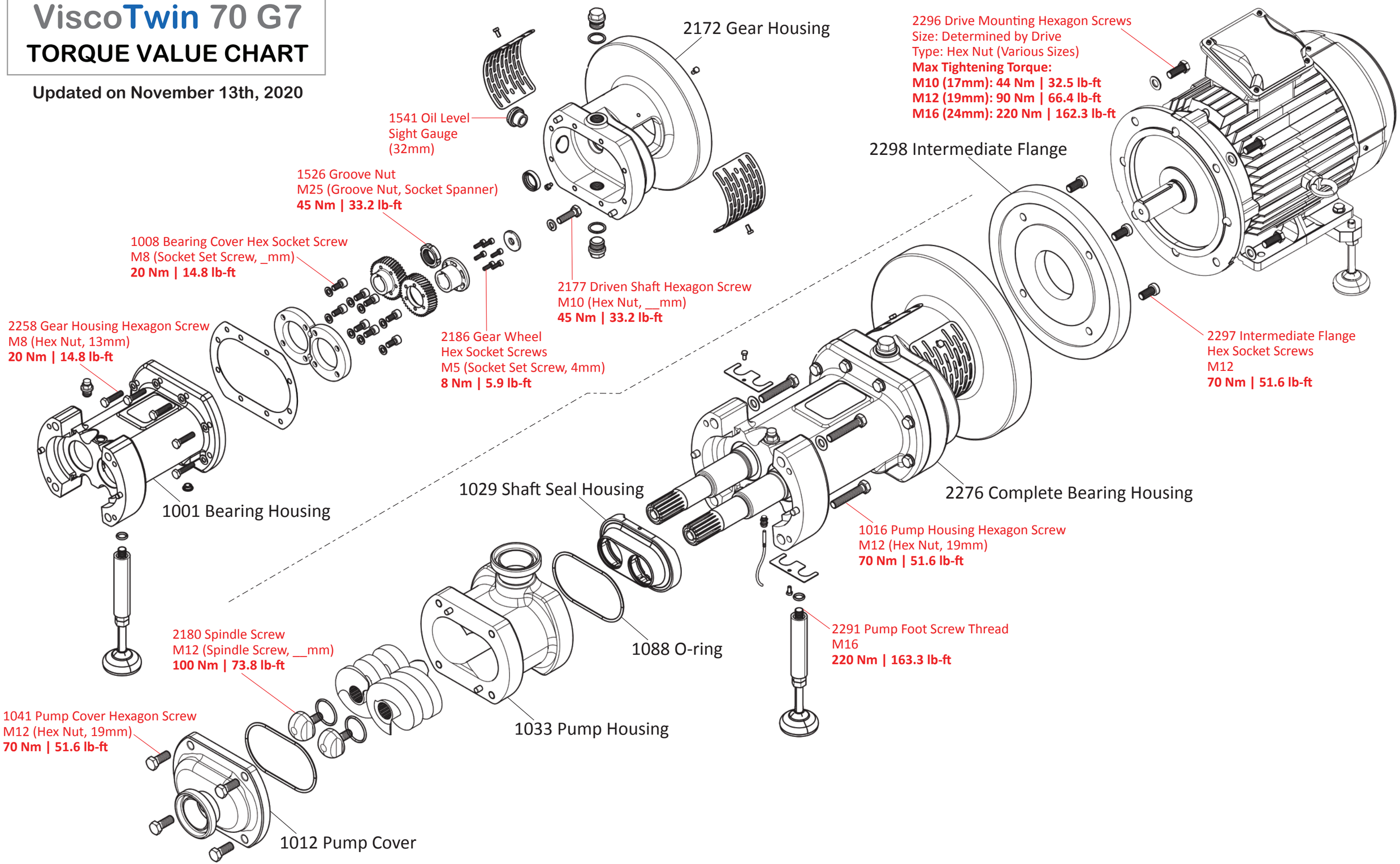
Updated on November 13th, 2020