ViscoTwin 70 G7
TORQUE VALUE CHART
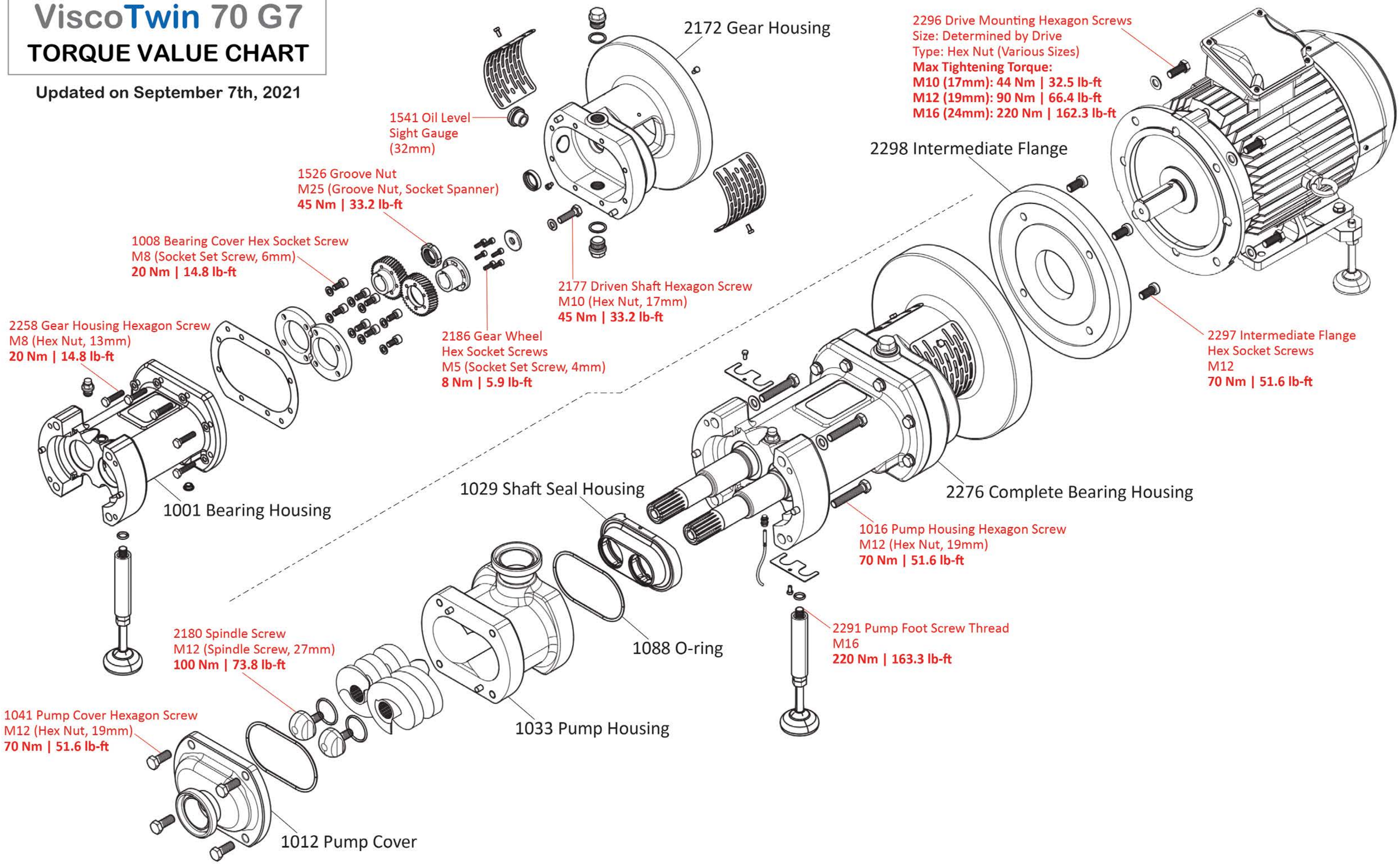
Updated on September 7th, 2021